MULTI SERVE

Instruction Manual



Caution – risk of fire or explosion due to flammable refrigerant used. Follow handling instructions carefully in compliance with local government regulations.

1. GENERAL INFORMATION

1.1 Information about the user manual

This user manual contains information about the installation, operation, and maintenance of the device and should be referred to as an important source of information and reference guide. Awareness of the safety instructions and instructions for use in this manual will ensure the safe and correct use of the device. In addition to the information given here, you should comply with any local Health and Safety Controls and generally applicable safety regulations. The instruction manual forms part of the product and should be kept near the device and easily accessible for anyone carrying out the installation, servicing, and maintenance or cleaning of the device.

1.2 Key to symbols

In this manual, symbols are used to highlight important safety instructions and any advice relating to the device. The instructions should be followed very carefully to avoid any risk of accident, personal injury, or material damage.



Caution!

This symbol highlights hazards, which could lead to injury. Please follow the instructions very carefully and proceed with particular attention in these cases.



WARNING! Electrical Hazard!

This symbol draws attention to potential electrical hazards. If you do not follow the safety instructions, you may risk injury or death.



NOTE! Operating Instructions

This symbol highlights instructions that should be followed to avoid any risk of damage, malfunctioning, and/or breakdown of the device.



Read User Manual

This symbol highlights tips and information which must be followed for an efficient and trouble-free operation of the device.

1.3 Liability and Warranties

All the information and instructions in this manual consider standard safety regulations, current levels of technical engineering, as well as the expertise and experience we have developed over the years. The instruction manual was translated with all due care and attention. However, we do not accept liability for any translation errors. If the delivery consists of a special model, the actual scope of delivery may differ from the descriptions

and illustrations in this manual. This is also the case for special orders or when the device has been modified in line with new technology.

NOTE!

Read the instruction manual carefully before using the device. The manufacturer does not accept liability for any damage or malfunction resulting from not following the instructions for use.

The instruction manual should be kept near the device, easily accessible for anyone wishing to use it. We reserve the right to make technical changes for the purpose of developing and improving useful properties.

2. SAFETY

This section provides an overview of all important safety aspects.
In addition, every chapter provides precise safety advice for the prevention of accidents which are highlighted using the above-mentioned symbols. Furthermore, attention should be paid to all pictograms, markers and labels on the device, which must be kept in a permanent state of legibility. By following all the important safety advice, you gain optimal protection against all hazards as well as the assurance of a safe and trouble-free operation.

2.1 General Information

This device is designed in accordance with the presently applicable technological standards. However, the device can pose a danger if handled improperly and inappropriately. Knowing the contents of the instruction manual, as well as avoiding mistakes, and thus operating this device safely and in a fault-free manner, is very essential to protect yourselves from hazards.

2.2 Safety Instructions for the Commercial Use of the Device

1. The appliance is intended for commercial or similar use (to be used by a layman in shops).
2. DO NOT use the appliance outdoors.
3. DO NOT attempt to service the item yourself.
4. DO NOT use damaged appliances. If you are in any doubt, consult a service agent.
5. DO NOT use electrical devices inside the appliance (e.g., heaters, ice cream makers, etc.) unless they are of the type recommended by the manufacturer.
6. Keep ventilationopenings in the appliance enclosure or in the built-in structure clear of obstruction.
7. DO NOT use mechanical devices or other means to accelerate the defrosting process, other than those recommended by the manufacturer.

8. DO NOT damage the refrigerant circuit.
9. DO NOT place combustible, explosive, or volatile articles, corrosive acids or alkalis or liquids in the appliance.
10. DO NOT use this appliance to store medical supplies.
11. DO NOT allow children to play with the packaging. Dispose plastic bags safely.
12. Always carry, store, and handle the appliance in a vertical orientation. Move the appliance by holding its base.
13. Always switch off and disconnect the power supply before cleaning.
14. If the supply cord is damaged, it must be replaced by the manufacturer, its service agent, or similarly qualified persons to avoid a hazard.
15. This appliance is not intended for use by persons (including children) with reduced physical, sensory, or mental capabilities, or lack of experience and knowledge unless they have been given supervision or instruction concerning the use of the appliance by a person responsible for their safety.
16. Children should be supervised to ensure that they do not play with the appliance.
17. For indoor use only. Not suitable for installation in an area where a water jet could be used. Must not be cleaned by a water jet.
18. To guarantee safe operation, ensure that the appliance is set up and connected as described in the instruction manual.
19. Any repairs and work on the appliance should only be carried out by the customer service department.

2.3 Intended Use



ATTENTION!

Only use this appliance for cooling and storage of food and beverage for commercial purposes.

3. INSTALLATION AND OPERATION

Component parts shall be replaced with like components and servicing shall be done by factory-authorized service personnel, to minimize the risk of possible ignition due to incorrect parts or improper service.

3.1 Safety Instructions



WARNING! Electrical Hazard!

Connect the device to a properly installed and grounded power socket. Never yank the cord to disconnect from the outlet.

The cable must not touch any hot parts.

- See that the cable does not touch any heat sources or sharp edges. Do not let the cable dangle over the cabinet edge.
- Do not use the device if it does not function properly or has been damaged.

- Do not use any accessories or spare parts that have not been recommended by the manufacturer. These can be dangerous for the user or lead to damage to the device or cause personal injury. Warranty may be voided in such cases.
- Do not lay the cable over carpets or heat insulations. Do not cover the cable. Keep the cable away from the operating range and do not dunk it into water.
- For your personal safety, this appliance must be properly grounded (earthed).



WARNING! WARNING! Electrical Hazard!

The device can cause injuries due to improper installation! Before installation, the local power grid specification should be compared with that of the device (see type label). Connect the device only in case of compliance! Take note of the security advice!

3.2 Installation and Connection



ATTENTION!

Connection and Installation of the device may be performed by qualified personnel only

- Unpack individual parts of the equipment. Remove the protective foil.
- The appliance must be in a safe place and on an even surface that can bear the weight of the device.
- Never place the device on a flammable base (e.g., on a tablecloth, carpet, etc.).
- Do not place the device near open fire sources, electric ovens, heating stoves, or other heat sources, for example, direct sunlight. Exposure to high temperatures may cause damage to the device surface or may influence the cooling power of the device and its energy consumption.
- The device location should have proper air circulation. Minimal distances are 5 cm from the back, 10 cm from the sides and 30 cm from the top of the device.
- Ventilation holes must never be covered.
- Do not place the device in areas with high air humidity, as it may cause damage to the device.
- The device should not block access to the plug.

3.3 Operation

- Clean the device prior to first use.
- Clean the insides of compartments with a disinfectant suited for the food sector.
- Clean the outside of the device with a damp, soft cloth. Dry the device thoroughly.
- Plug the mains plug into an earthed outlet.

- Turn the device on with the mains switch on the front of the display.

3.4 Notices for the User

- Only fill the refrigerated cabinet once it has reached the desired temperature (see display).
- Do not put any warm foods or liquids, as well as uncovered food, into the refrigerated cabinet.
- Close or wrap the food well.
- Do not impair free air circulation through overfilling.
- When filling the refrigerated cabinet for the first time, only open and fill one compartment at a time to prevent the device from toppling.
- Wait sometime before opening the device's doors again.
- To prevent loss of refrigeration, only open the doors briefly to prevent loss of cooling energy. Also, do not open doors too frequently.
- In case of a sudden power loss, do not open the doors to prevent loss of cooling air.
- After the loss of power or pulling the mains plug, do not reconnect the device to the power supply for at least 5 minutes.

3.5 Defrosting procedure

This device has two defrosting procedures: Automatic defrosting and Manual defrosting:

- Automatic defrosting

  It is the default setting. During the normal operation of this device, the defrosting procedure starts every 4 hours, and the duration time is 20 minutes. It is the best defrosting interval and duration through long-term laboratory testing. Please do not change the settings if there is not any ice blocking up on the evaporator.

  If you need to change the settings of automatic defrosting, please carefully read the instruction manual about the temperature controller in this manual or contact the dealers who provided this device to you.
- Manual defrosting

  For special cases, the device allows manual defrosting.

Please refer to the instruction manual for the temperature controller in this manual.

4. TEMPERATURE CONTROL

This product uses a temperature controller.

If you want to know more information and details about it, please refer to the instruction manual of this controller placed together with this manual or contact its manufacturer directly.

5. CLEANING AND MAINTENANCE



5.1 Safety Advice

- Before repairing or cleaning the device, make sure it has been disconnected from the power socket (pull the power plug!!!) and has cooled down.
- Do not use any acid agents and make sure no water is present in the device.
- To protect yourself from electric shock, never immerse the device, its cables and the plug-in water or other liquids.



ATTENTION!

The device is not designed to be directly sprayed off with a water jet.

Hence, you must not use pressure water jets for the cleaning of the device!

5.2 Cleaning

- The device should be cleaned regularly.
- Clean the insides of compartments with a disinfectant suited for the food sector.
- Clean the outside of the device with a damp, soft cloth. Dry the device thoroughly.
- Never use abrasive cleaning agents, e.g., abrasive scouring powder, agents containing alcohol, or thinners, which could damage the plastic parts and/or the coating.
- Only use a soft cloth and make sure you never use any kind of abrasive agents or pads which could scratch the surface.
- After the cleaning procedure you should use a soft and dry cloth to wipe dry and polish the surface.

If the device is not to be used for a long period of time, do the following:

- Remove the plug from the outlet socket.
- Remove all foodstuff from the device.
- Clean the inside and the outside of the device using a soft damp cloth and a mild cleaning agent. Next, wash the device with clean water and dry it thoroughly.

5.3 Safety Instructions for Maintenance

- Check the mains lead from time to time to ensure it isn't damaged in any way. Never use the device if the lead is damaged. If the lead is damaged it must be replaced by a qualified electrician.
- In case of damage or malfunction, please contact our customer service.
- Only a qualified technician, using original spare parts and accessories, should carry out repairs and maintenance of the device. Do not attempt to repair the device yourself.

5.4 Maintenance

To maintain the efficiency of the cooling unit for a long time, the following maintenance operations must be carried out regularly for the condenser:

- Disconnect the device from the outlet socket (remove the plug!)
- Open the cooling unit, thus providing easy access to the condenser.



WARNING! Burn Risk!

The surface of the compressor is hot during normal use of the device. Do not touch the surface of the compressor with bare hands.

- Gently move a vacuum cleaner or a brush over the condenser towards the ribs.



NOTE!

Handle wires gently, do not pull cables!

- Close the cover after cleaning.

6. TROUBLESHOOTING

Problem	Cause	Remedy
No refrigeration	•Mains plug not in the wall outlet •Power circuit fuse defect •Loss of power	•Insert mains plug correctly •Check the power supply •Check the power supply
Insufficient refrigeration	•Direct sunlight or heat source nearby •Bad air circulation around the refrigerated cabinet •Stored foods are too hot •Refrigerated cabinet is overfilled	•Ensure sufficient distance between the refrigerated cabinet and the heat sources •Ensure sufficient distance to the walls or other objects •Let the food cool down before storing •Avoid an overfilling of the refrigerated cabinet, and possibly remove dispensable food from the device

If problems still persist after checking all these possible error sources, please contact customer service.

7. DISPOSAL



Discarded electric appliances are recyclable and should not be discarded in domestic waste! Please actively support us in conserving resources and protecting the environment by returning this appliance to the collection centers (if available).

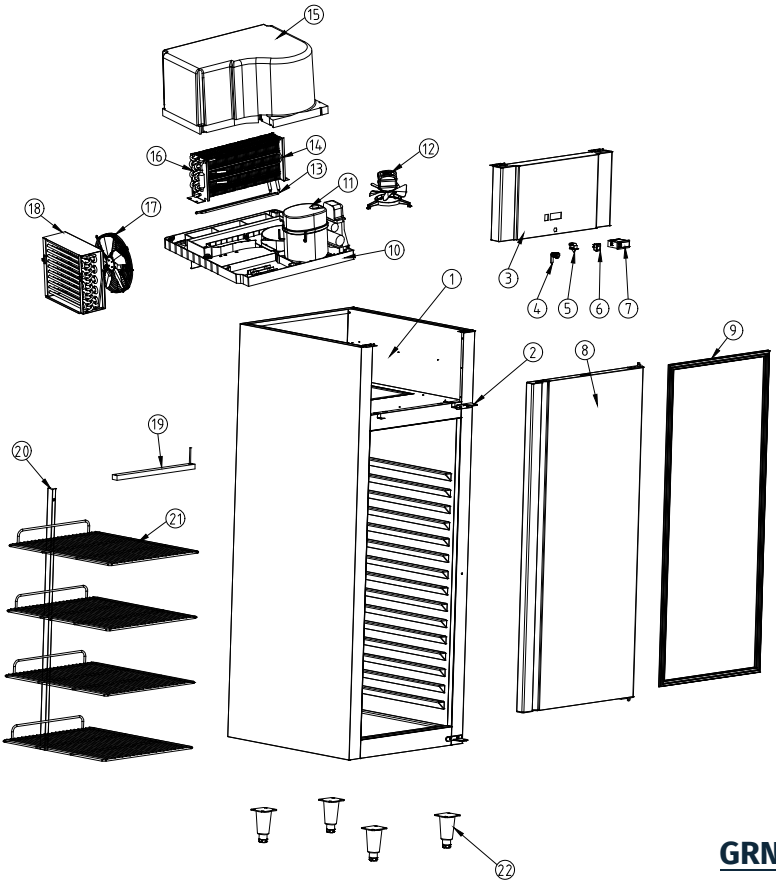

GRN-600-CH

NO	PART NAME	QTY
1	CABINET	1PC
2	DOOR HINGE	4PCS
3	MIDDLE BEAM	1PC
4	TOP COVER	1PC
5	DOOR SWITCH	2PCS
6	DOOR LOCK	2PCS
7	POWER SWITCH	1PC
8	CONTROLLER	1PC
9	DOOR	2PCS
10	DOOR GASKET	2PCS
11	COMPRESSOR FIXING BASE	1PC
12	COMPRESSOR	1PC
13	EVAPORATOR FAN MOTOR	1PC

NO.	PART NAME	QTY
14	NULL	1PC
15	NULL	1PC
16	EVAPORATOR FAN COVER	1PC
17	EVAPORATOR	1PC
18	CONDENSER FAN MOTOR	1PC
19	CONDENSER	1PC
20	LED LIGHT	2PCS
21	REAR POST	2PCS
22	REAR STOPPER	2PCS
23	SHELF	8PCS
24	FRONT POST	1PC
25	ADJUSTABLE FEET	4PCS

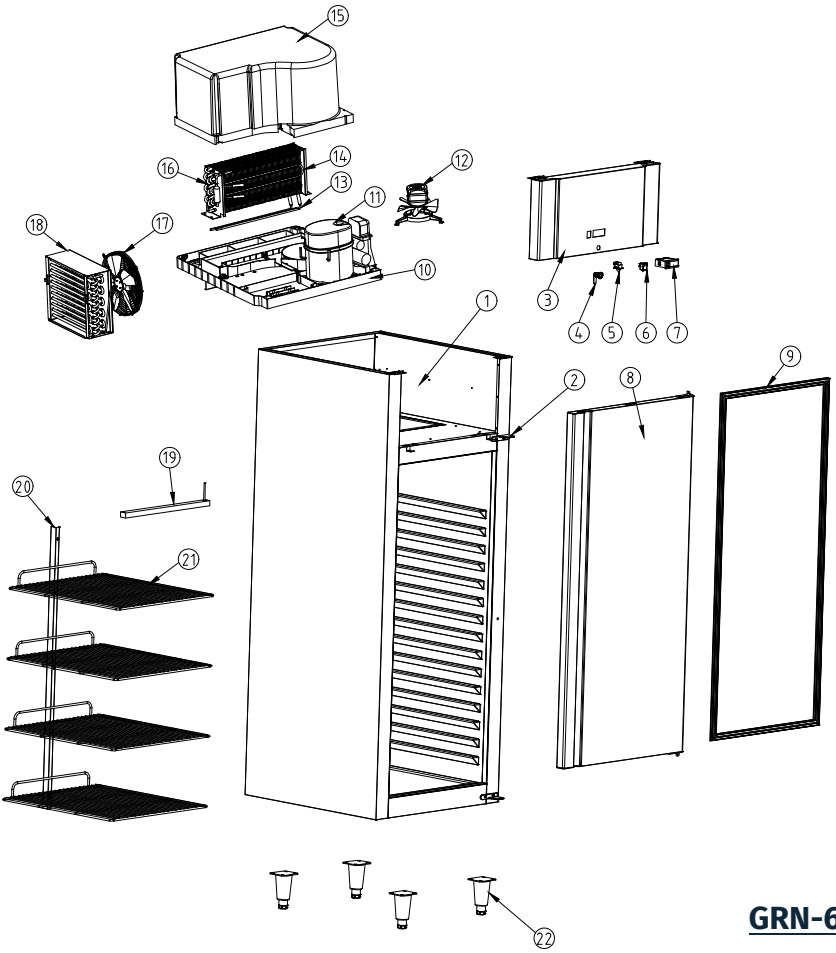

GRN-600-FR

NO.	PARTS	QTY
1	CABINET	1PC
2	DOOR HINGE	2PCS
3	TOP COVER	1PC
4	DOOR LOCK	1PC
5	DOOR SWITCH	1PC
6	POWER SWITCH	1PC
7	CONTROLLER	1PC
8	DOOR	1PC
9	DOOR GASKET	1PC
10	COMPRESSOR FIXING BASE	1PC
11	COMPRESSOR	1PC
12	EVAPORATOR FAN MOTOR	1PC

NO.	PARTS	QTY
13	DEFROSTING HEATER	1PC
12	EVAPORATOR FAN MOTOR	1PC
13	DEFROSTING HEATER	1PC
14	NULL	1PC
15	EVAPORATOR COVER	1PC
16	EVAPORATOR	1PC
17	CONDENSER FAN MOTOR	1PC
18	CONDENSER	1PC
19	LED LIGHT	1PC
20	SHELF STOPPER	1PC
21	SHELF	4PCS
22	ADJUSTABLE FEET	4PCS

GRN-1200-CH

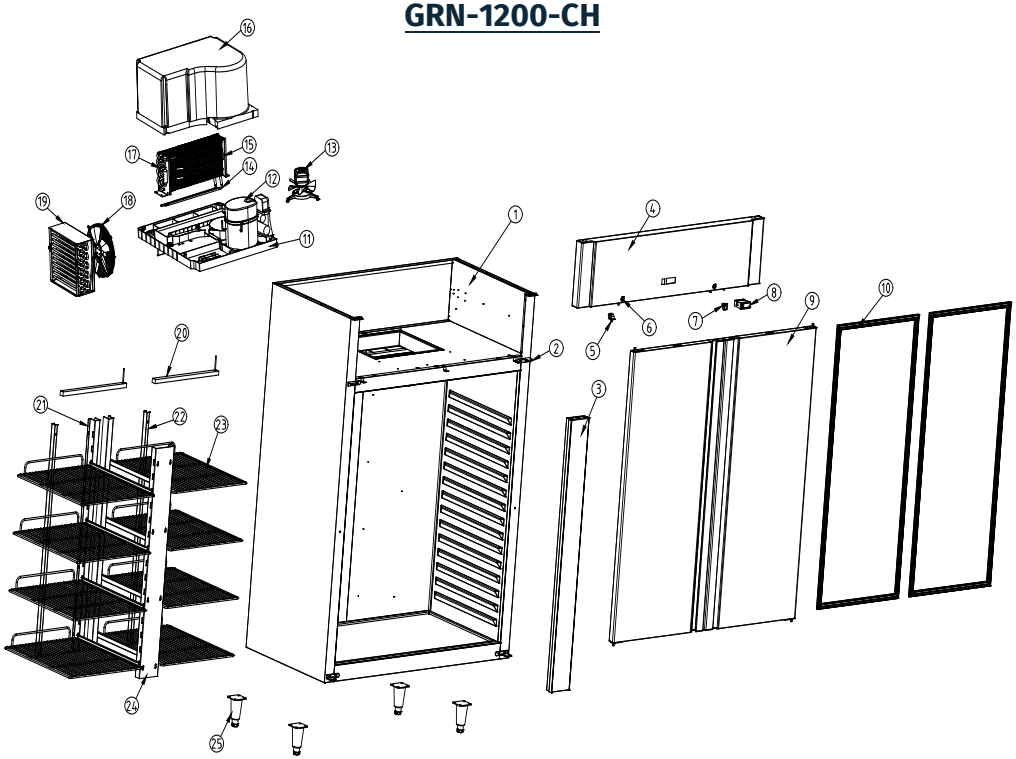

NO	PART NAME	QTY
1	CABINET	1PC
2	DOOR HINGE	4PCS
3	MIDDLE BEAM	1PC
4	TOP COVER	1PC
5	DOOR SWITCH	2PCS
6	DOOR LOCK	2PCS
7	POWER SWITCH	1PC
8	CONTROLLER	1PC
9	DOOR	2PCS
10	DOOR GASKET	2PCS
11	COMPRESSOR FIXING BASE	1PC
12	COMPRESSOR	1PC
13	EVAPORATOR FAN MOTOR	1PC

NO.	PART NAME	QTY
14	NULL	1PC
15	NULL	1PC
16	EVAPORATOR FAN COVER	1PC
17	EVAPORATOR	1PC
18	CONDENSER FAN MOTOR	1PC
19	CONDENSER	1PC
20	LED LIGHT	2PCS
21	REAR POST	2PCS
22	REAR STOPPER	2PCS
23	SHELF	8PCS
24	FRONT POST	1PC
25	ADJUSTABLE FEET	4PCS

GRN-1200-FR

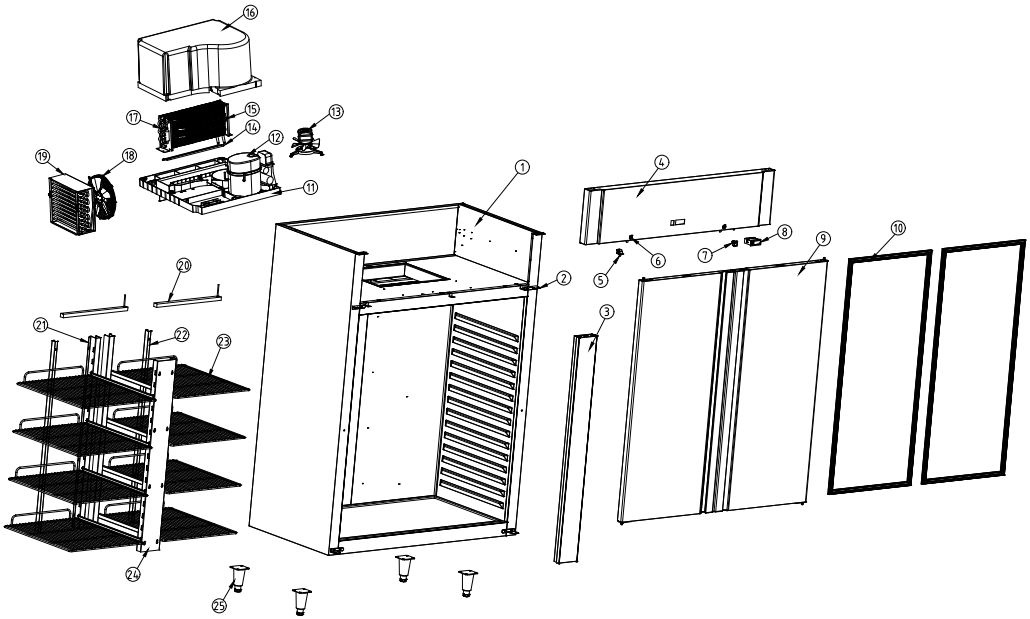

NO.	PART NAME	QTY
1	CABINET	1PC
2	DOOR HINGE	4PCS
3	MIDDLE BEAM	1PC
4	TOP COVER	1PC
5	DOOR SWITCH	2PCS
6	DOOR LOCK	2PCS
7	POWER SWITCH	1PC
8	CONTROLLER	1PC
9	DOOR	2PCS
10	DOOR GASKET	2PCS
11	COMPRESSOR FIXING BASE	1PC
12	COMPRESSOR	1PC
13	EVAPORATOR FAN MOTOR	1PC

NO.	PART NAME	QTY
14	DEFROSTING HEATER	1PC
15	NULL	1PC
16	EVAPORATOR FAN COVER	1PC
17	EVAPORATOR	1PC
18	CONDENSER FAN MOTOR	1PC
19	CONDENSER	1PC
20	LED LIGHT	2PCS
21	REAR POST	2PCS
22	REAR STOPPER	2PCS
23	SHELF	8PCS
24	FRONT POST	1PC
25	ADJUSTABLE FEET	4PCS

GRN-CC-2D-CH

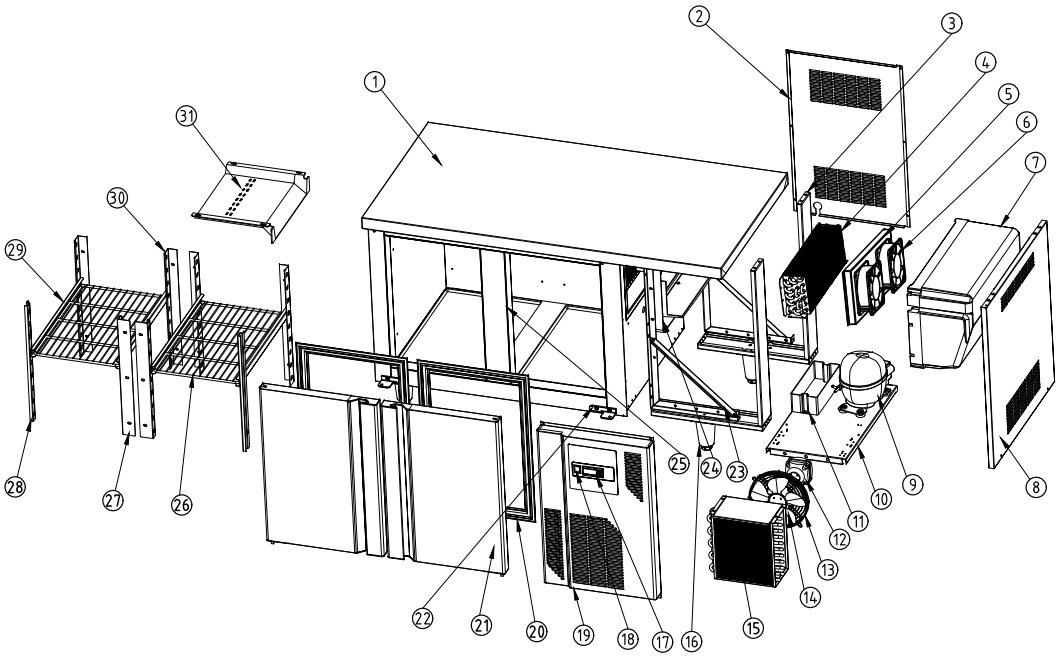

NO.	PART NAME	QTY
1	CABINET	1PC
2	REAR GRILL	1PC
3	SUPPORT PANEL	2PCS
4	EVAPORATOR	1PC
5	MOTOR FIXING PANEL	1PC
6	EVAPORATOR FAN MOTOR	2PCS
7	EVAPORATOR COVER	1PC
8	SIDE GRILL	1PC
9	COMPRESSOR	1PC
10	COMPRESSOR INSTALLATION BOARD	1PC
11	WATER BOX	1PC
12	CONDENSER FAN MOTOR	1PC
13	CONDENSER FAN COVER	1PC
14	CONDENSER FAN LEAF	1PC
15	CONDENSER	1PC
16	ADJUSTABLE FOOT	4PCS

NO.	PART NAME	QTY
17	CONTROLLER	1PC
18	POWER SWITCH	1PC
19	CONTROL PANEL	1PC
20	DOOR GASKET	2PCS
21	DOOR	2PCS
22	DOOR HINGE	4PCS
23	SUPPORT BRACKET	2PCS
24	EVAPORATOR FIXING BASE	1PC
25	MIDDLE BEAM	1PC
26	SHELF	2PCS
27	SHELF MIDDLE BEAM BRACKET	2PCS
28	SHELF FRONT BRACKET	2PCS
29	SHELF GUIDE	4PCS
30	SHELF REAR BRACKET	4PCS
31	AIR DEFLECTOR	1PC

GRN-CC-2D-FR

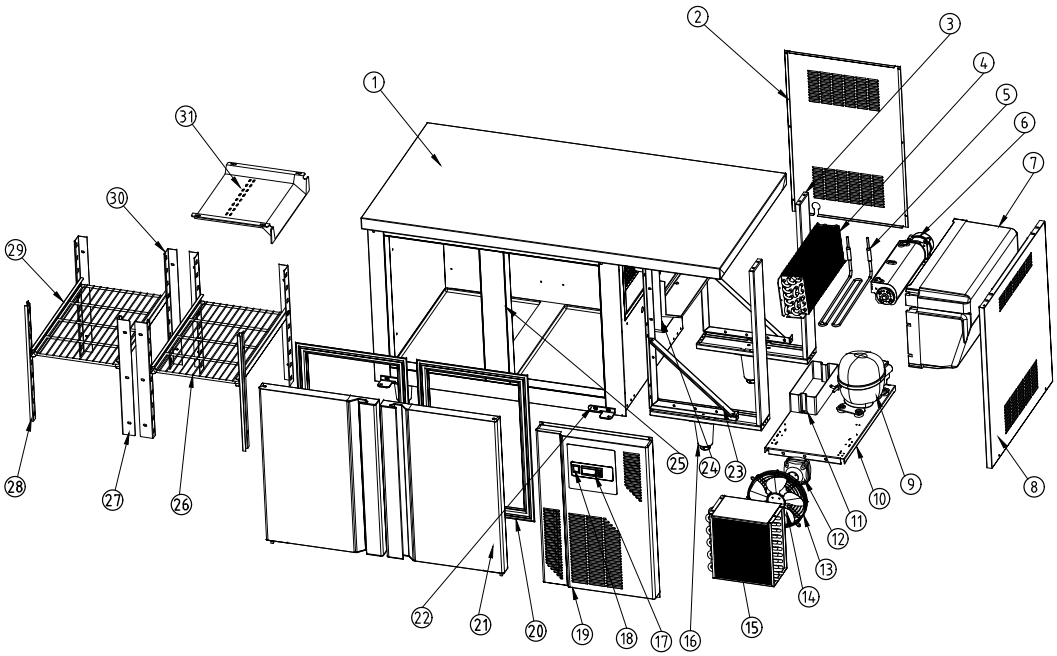

NO.	PART NAME	QTY
1	CABINET	1PC
2	REAR GRILL	1PC
3	SUPPORT PANEL	2PCS
4	EVAPORATOR	1PC
5	DEFROSTING HEATER	1PC
6	EVAPORATOR FAN MOTOR	2PCS
7	EVAPORATOR COVER	1PC
8	SIDE GRILL	1PC
9	COMPRESSOR	1PC
10	COMPRESSOR INSTALLATION BOARD	1PC
11	WATER BOX	1PC
12	CONDENSER FAN MOTOR	1PC
13	CONDENSER FAN COVER	1PC
14	CONDENSER FAN LEAF	1PC
15	CONDENSER	1PC
16	ADJUSTABLE FOOT	4PCS

NO.	PART NAME	QTY
17	CONTROLLER	1PC
18	POWER SWITCH	1PC
19	CONTROL PANEL	1PC
20	DOOR GASKET	2PCS
21	DOOR	2PCS
22	DOOR HINGE	4PCS
23	SUPPORT BRACKET	2PCS
24	EVAPORATOR FIXING BASE	1PC
25	MIDDLE BEAM	1PC
26	SHELF	2PCS
27	SHELF MIDDLE BRACKET	2PCS
28	SHELF FRONT BRACKET	2PCS
29	SHELF GUIDE	4PCS
30	SHELF REAR BRACKET	4PCS
31	AIR DEFLECTOR	1PC

GRN-CC-3D-CH

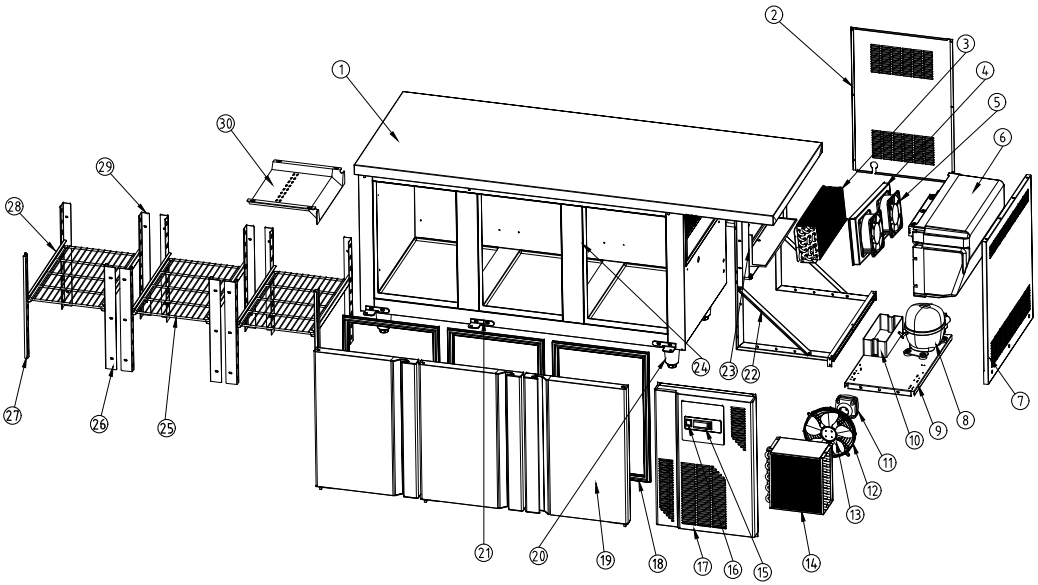

NO.	PART NAME	QTY
1	CABINET	1PC
2	REAR GRILL	1PC
3	EVAPORATOR	1PC
4	MOTOR FIXING PANEL	1PC
5	EVAPORATOR FAN MOTOR	1PC
6	EVAPORATOR COVER	1PC
7	SIDE GRILL	1PC
8	COMPRESSOR	1PC
9	COMPRESSOR INSTALLATION BOARD	1PC
10	WATER BOX	1PC
11	CONDENSER FAN MOTOR	1PC
12	CONDENSER FAN COVER	1PC
13	CONDENSER FAN LEAF	1PC
14	CONDENSER	1PC
15	CONTROLLER	1PC

NO.	PART NAME	QTY
16	POWER SWITCH	1PC
17	CONTROL PANEL	1PC
18	DOOR GASKET	3PCS
19	DOOR	3PCS
20	ADJUSTABLE FOOT	4PCS
21	DOOR HINGE	6PCS
22	SUPPORT BRACKET	2PCS
23	EVAPORATOR FIXING BASE	1PC
24	MIDDLE BEAM	2PCS
25	SHELF	3PCS
26	SHELF MIDDLE BRACKET	4PCS
27	SHELF FRONT BRACKET	2PCS
28	SHELF GUIDE	6PCS
29	SHELF REAR BRACKET	6PCS
30	AIR DEFLECTOR	1PC

GRN-CC-3D-FR

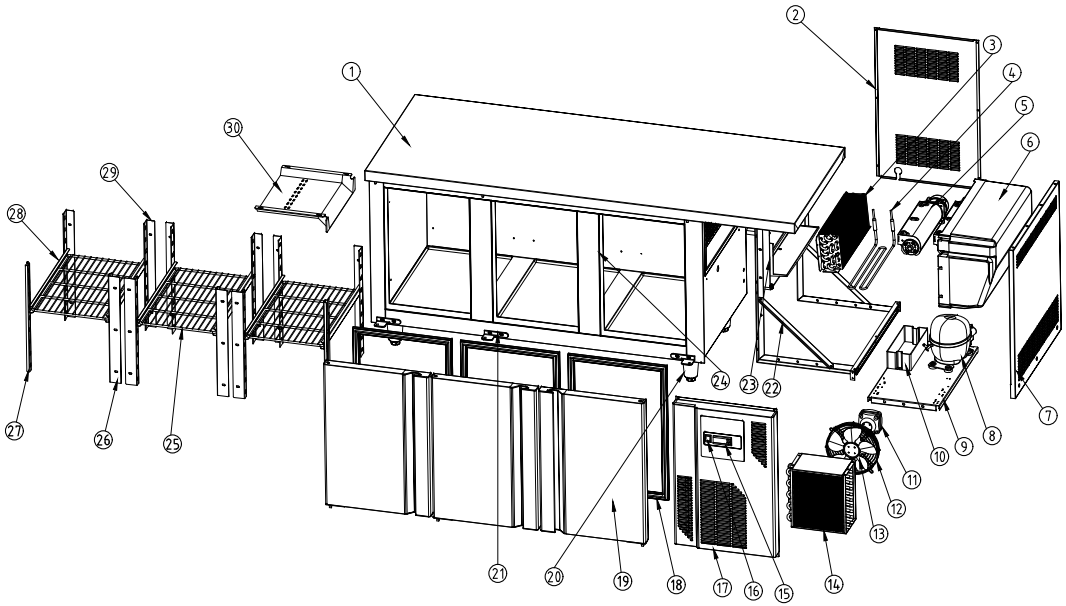

NO.	PART NAME	QTY
1	CABINET	1PC
2	REAR GRILL	1PC
3	EVAPORATOR	1PC
4	DEFROSTING HEATER	1PC
5	EVAPORATOR FAN MOTOR	2PCS
6	EVAPORATOR COVER	1PC
7	SIDE GRILL	1PC
8	COMPRESSOR	1PC
9	COMPRESSOR INSTALLATION BOARD	1PC
10	WATER BOX	1PC
11	CONDENSER FAN MOTOR	1PC
12	CONDENSER FAN COVER	1PC
13	CONDENSER FAN LEAF	1PC
14	CONDENSER	1PC
15	CONTROLLER	1PC

NO.	PART NAME	QTY
16	POWER SWITCH	1PC
17	CONTROL PANEL	1PC
18	DOOR GASKET	3PCS
19	DOOR	3PCS
20	ADJUSTABLE FOOT	4PCS
21	DOOR HINGE	6PCS
22	SUPPORT BRACKET	2PCS
23	EVAPORATOR FIXING BASE	1PC
24	MIDDLE BEAM	2PCS
25	SHELF	3PCS
26	SHELF MIDDLE BRACKET	4PCS
27	SHELF FRONT BRACKET	2PCS
28	SHELF GUIDE	6PCS
29	SHELF REAR BRACKET	6PCS
30	AIR DEFLECTOR	1PC